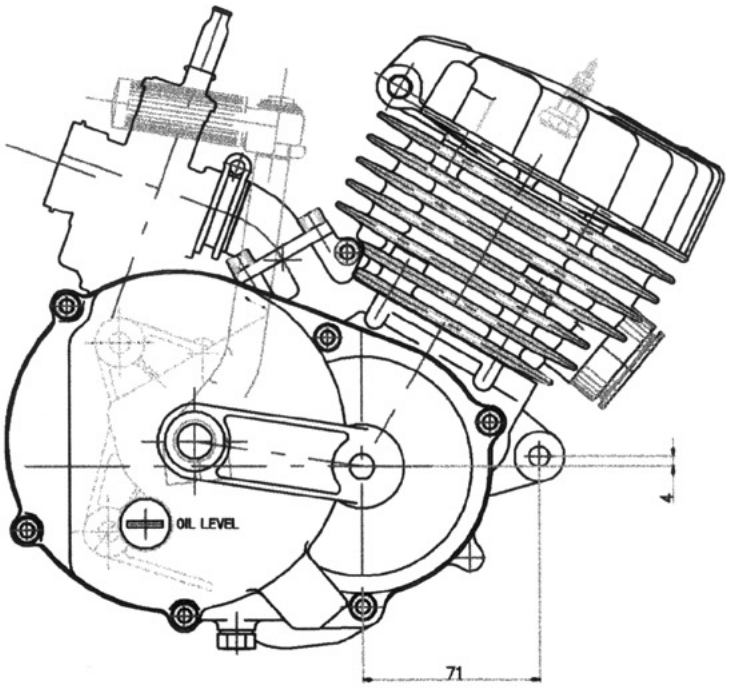
OIL LEVEL
4
71

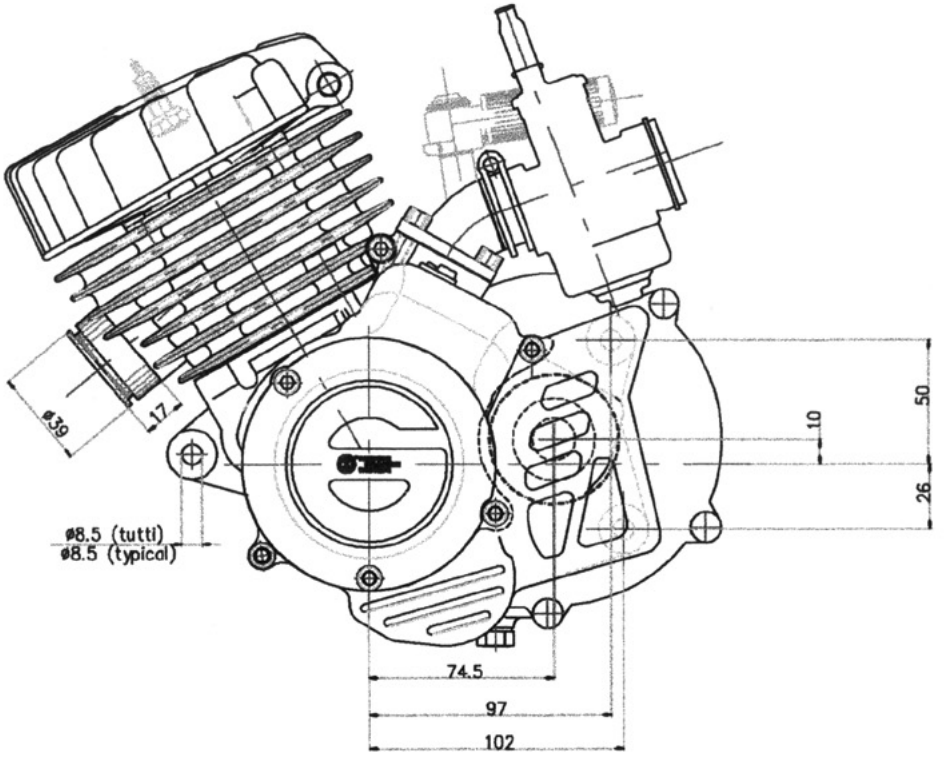
ø39
17
ø8.5 (tutti)
ø8.5 (typical)
10
50
26
74.5
97
102

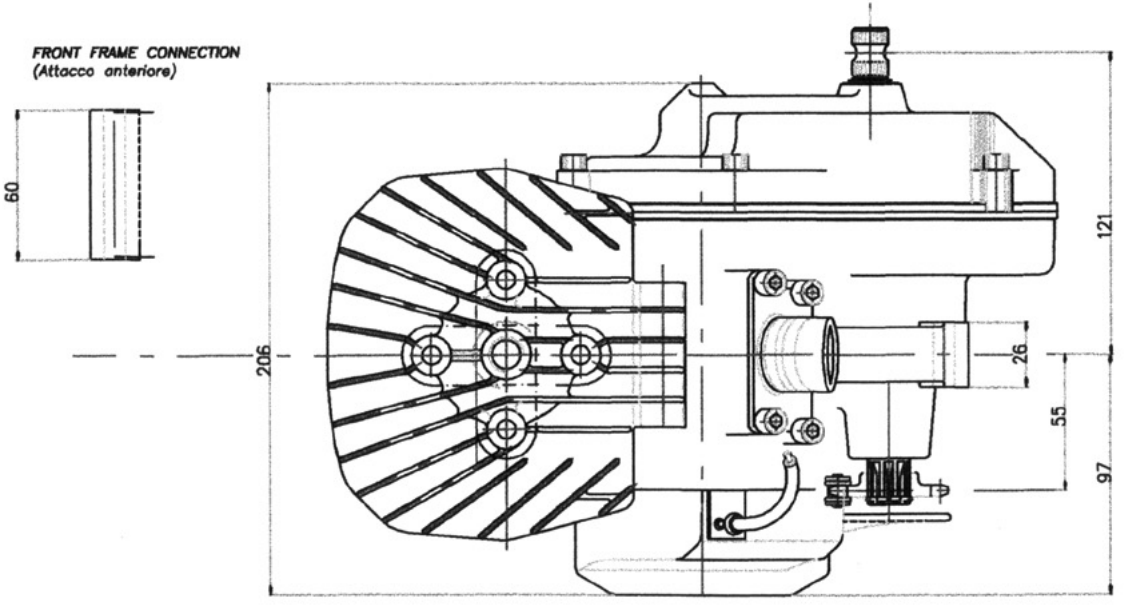
FRONT FRAME CONNECTION
(Attacco anteriore)
60
206
121
26
55
97